ICS13.040.40
Z 60

GB 20950˙ 2007

ẏ ñ

Emission standard of air pollutant for bulk gasoline terminals

（发布稿）

2007-06-22 ˧ 2007-08-01

فى ɑ ˧
فى



ý ñ

1 ت

2 ˚

3 б Ҍ

3.1
ý **bulk gasoline terminal**

3.2
gasoline vapor

3.3
vapor emission concentration

3.4
ч **gasoline loading**

3.5
gasoline receiving

3.6
bottom loading

3.7

floating roof tank

3.8

ھ **vapor recovery processing equipment**

3.9

vapor collection system leakage point

3.10

E ﻻ **hydrocarbon gas detector**

4 ﻟ 8 ﻢ ḣ

4.1

4.3.3

5 ẏ 8

5.1

5.2

5.3

6 ñ

6.1

2 ẏ 8 ñ Ա ᴡ Ռ

6.2

A
ˆ ˜

A.1 ŏ

A.2

A.2.1

A.2.2

A.2.3

A.3

A.3.1

A.3.2

A.3.3

B

ˆ ˜

B.1 ώ

B.2 ˚

B.2.1

B.2.2

B.2.3

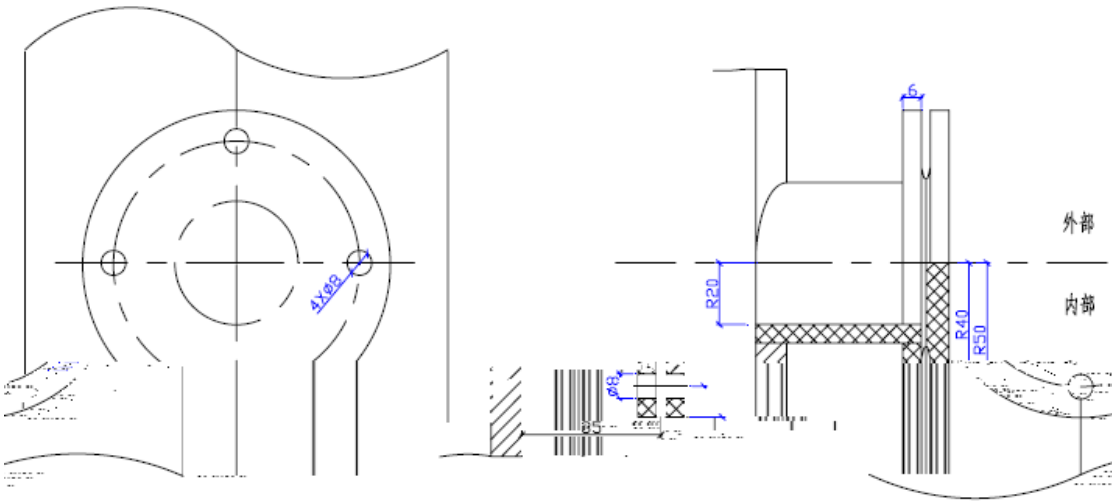

B.2.4

B.2.5

B.3

B.3.1

B.3.2

B.3.3

B.3.4

B.3.5

$$E = \left(1-\frac{(1-\varphi_1)C_2}{(1-\varphi_2)C_1}\right)\times 100\%$$

E

C_1

φ_1

C_2

φ_2

φ

$$\varphi = \frac{22.4C}{1000M}$$

φ

C

22.4

M

C

$$C = C\left(\frac{273+t_f}{273}\cdot\frac{101300}{B_a - P_{fv}}\right)$$

C

t_f

B_a

P_{fv} t_f

B.3.6

B.4

B.4.1

B.4.2

B.4.3

C

ˆ ˜

ẏ ˋ

C.1

□ □ □

C.2

□ □ □

C.4 Ч F

□ □ □

C.5 è ы

□ □ □
